

Động cơ điện đóng mở van Flowinn - ON - OFF - EOM2

AC 110v , AC 220v , AC/DC 24v

Electric Actuator / Ball Valve

EF(O)M & EMT Actuator Series



EFM1/A Actuator



EFM1/A/B-H Actuator



EOM2~7 Actuator



EOM8~9 Actuator



EOM10~12 Actuator



EOM13-15 Actuator



EMTMX Actuator

Electric Actuator Installation and Wiring

Attention:

1. Only available for connecting by copper wire, wiring method must meet electrical specifications of local, regional and national standard. Power supply over the rated value of actuator is not allowed.
2. To ensure the electric actuators are better protected from water, please pay attention to the cable specification:① for EFM1/A/B-H series, please ensure the diameter of the cable is 6~12mm;② for EO(F)M2-EO(F)M15 & EMT series, please ensure the diameter of the cable is 10~14mm.
3. When input signal of modulating actuator (input signal/feedback signal) is current signal (4~20mA), pls notice that impedance value of input load at controlling end should ≤ 250Ω, while the output load should ≥ 250Ω. Any impedance value falls out of the scope mentioned above will cause inaccurate controlling signal & feedback signal. (Pls see diagram.)
4. To ensure the reliability of the control, we advise to wire the signal circuit and power circuit separately to the actuators and please ensure the earth wire is firm and reliable.
5. Working time:S2 standard 30 min.

Warning: Risk of damage to human body

Pls cut off power supply before wiring. Accident touch of dangerous electriferous components might cause

Warning: Risk of damage to property

1. Do not turn on power before confirming wiring is correct. Short circuit and wrong connection will leads to permanent equipment damage.
2. Please pay attention to indicator on the top of actuator. Barbaric operation on hand wheel is prohibited when it passes totally close/open position.
3. Motor of actuator has the function of over-temperature protection. When valve gets stuck or other abnormal happens, failing to be opened or closed in a right way, motor will get into over-temperature protection. At this time, valve can't be opened or closed to the required position. Please check valve or other abnormal occasion. After the breakdown is solved, actuator will be back to normal accordingly.

Actuator installation steps:

1. Put the actuator vertical alignment onto valve, notice stem of valve needs to fit into adapter of actuator, turning actuator hand wheel to adjust adapter position, clockwise to close / anticlockwise to open.
2. Actuator is fully closed by manufactory (the top indicator point to "C"), valve opening needs to be same as actuator "open to open, close to close".
3. If it is hard to fix screws, pls slightly turn the actuator hand-wheel.
4. There is no directional requirement for assembling actuator on the top of valve; it can be assembled as the environment or perspective requirement.
5. Mechanical stop screws for limiting totally close /open

Actuator wiring steps:

1. Loose 4 screws on actuator cover and then take cover off.
2. Wiring according to the attached wiring diagram on the surface of cover inside.
3. Recheck and then power on after confirming the wiring is right.
4. Turning actuator on to make sure opening/closing function and 2 limited positions are correct.
5. Put the cover back and then fix 4 screws.

Setting procedure of modulating actuators (Notice! Operated by professional person)

Calibration	LED on PCB		Actuator Movement
1. Supply power to terminal 1 and 2.	●	Lit	Actuator moves to the position as indicated by control signal.
2. Press button S5 for 5 seconds	○	Dark	Actuator moves to "100%" position (valve open).
	◐	Flash	Actuator stops at "100%" position (valve open), indicate light flashes, and then the actuator is ready to move towards "0%"position (valve closed).
	○	Dark	Actuator moves to "0%" position (valve closed).
	◐	Flash	Actuator stops at "0%" position (valve closed).The indicate light flashes, and then the calibration finished.
3. Calibration finished.	●	Lit	Actuator moves to the position as indicated by control signal.

*Remark: Calibration method is shown as table above. The factory has set it OK, there is no need to reset when normal use, unless there is something wrong with the output signal.

Adjustment of input/output signal for modulating type

The switch diagram of PCB

Signal	Input		Output	
	S1	S2	S3	S4
Default → 4-20mA	⁚	⁚	⁚	⁚
0-10V	⁚	⁚	⁚	⁚
2-10V	⁚	⁚	⁚	⁚

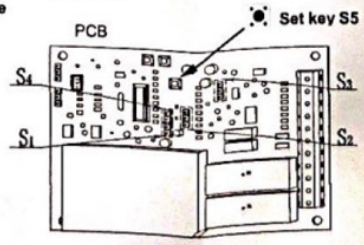

Version: 14

Trouble shooting

Date: Dec .09. 2015

Failure	Reason	Action
Actuator fails to act	1.1. Loss power supply (no power). 1.2. No input signal or input value is wrong. 1.3. Wire breaks or separates from terminal block. 1.4. Motor overheating. Overheating protector of motor acts. 1.5. Limit switch acts in the middle of opening location. 1.6. Capacitor of motor breaks. 1.7. Enamel covered wire of motor breaks. 1.8. Connect wrongly power supply to input signal terminal (modulating type).	1.1. Check voltage of power. 1.2. Check input signal. 1.3. Wire, change terminal block. 1.4. Wait motor back to cool. 1.5. Adjust stroke,switch cam. 1.6. Replace capacitor. 1.7. Replace motor. 1.8. Replace PCB.
Actuator keeps acting back and forth	2.1. The signal is not stable. 2.2. Potentiometer can't contact very well or damaged (modulating type). 2.3. One of the gears around potentiometer is loose (modulating type).	2.1. Check the input signal. 2.2. Change potentiometer. 2.3. Use tools to fix the screw of gear.
Input and feedback signal don't match with each other(modulating type)	3.1. Input signal is wrong. 3.2. Wrong PCB adjustment (need to be operated by professional person). 3.3. The position of gear on potentiometer is wrong.	3.1. Check the input signal. 3.2. Reset follows the setting procedure. 3.3. Readjust the gear on potentiometer.
No feedback signal	The signal wire is opening or can't connect well.	Check if wiring is done according to wiring diagram.

*Remark: When water vapor appears inside actuators, which are unpowered after installation, please connect power to heater to dry them before operation .

Table 1: EF(O)M1~15 datasheet of actuator;
AC24/110/220/240V 1 phase 50/60Hz; EOM2~15 can be AC380v- 440V 3 phases 50/60Hz

Unit: mm

Model		Torque (N·m)	Open/Close Time (Sec)			Power (W)	A	B	C	D	E	F	□G	H	ΦI	J	ISO5211	Weight (kg)
			AC/DC24V	AC110/240V	AC380													
EFM1	ON/OFF	35	8	11	—	10	162	145	79	—	—	—	11×11	20	36	4-M5	F03	3
	Modulating						192				—	—			50	4-M6	F05	5
EFMA	ON/OFF	50	10	15	—	10	162				—	—	11×11					3
	Modulating						192				—	—	14×14		70	4-M8	F07	5
EFM1-H	ON/OFF	35	8	11	—	10	188		108	165	—	—	11×11					3.6
EFMA-H		50	10	15	—	10	218				—	—	11×11					3.6
	Modulating												14×14					
EFMB-H		80	15	22	—	10					—	—	14×14					3.6
EOM2		100	14	19		40	265	123	79	216	120	240	14×14	35	70	4-M8	F07	11
EOM3		200	28	39		40	265	123	79	216	120	240	17×17	35	70	4-M8	F07	11
EOM3A		300	28	39		40	265	123	79	216	120	240	17×17	35	120	4-M10		
EOM4		400	21	29		90	321	187	103	262	150	297	22×22	55	102	4-M10	F10	22
EOM5		600	28	39		90	321	187	103	262	150	297	22×22	55	102	4-M10	F10	22
													27×27		125	4-M12	F12	
EOM6		800	34	47		90	321	187	103	262	150	297	27×27	55	125	4-M12	F12	22
EOM7		1000	34	47		120	321	187	103	262	150	297	27×27	55	125	4-M12	F12	22
EOM7A		1300	34	47		120	321	187	103	262	150	297	27×27		140	4-M16		
EOM8		1700	25	34		200	378	241	119	293	161	346	27×27	65	125	4-M12	F12	36
EOM8A		2000	25	34		200	378	241	119	293	161	346	27X27		140	4-M16	F14	
EOM9		2300	34	47		200	378	241	119	293	161	346	36×36	65	125	4-M12	F12	36
															140	4-M16	F14	
															165	4-M20	F14	
EOM10		3500	55	76		200	532	116	215	293	302	182	40×40	85	140	4-M16	F14	76
															165	4-M20	F16	
EOM11		5000	76	105		200	532	116	215	293	302	182	46×46	85	140	4-M16	F16	76
															165	4-M20		
EOM12		8000	103	143		200	543	160	215	293	343	168	55×55	130	254	8-M16	F25	107
EOM13		13000	—	—	109	400	672	520	—	293	281	331	55×55	120	254	8-M16	F25	218
													75×75		298	8-M20	F30	
EOM14		16000	—	—	129	400	672	520	—	293	281	331	55×55	120	254	8-M16	F25	218
													75×75		298	8-M20	F30	
EOM15		20000	—	—	155	400	672	520	—	293	281	331	55×55	120	254	8-M16	F25	218
													75×75		298	8-M20	F30	

Remark: Upper "□G" dimension is suggestive square hole, can be decided by customer under which meets ISO5211 standard

Table 2:EMTMX data sheet of actuator: AC380-440V 3 phases 50/60Hz

Unit: mm

Model	Torque (Nm)	Open/Close Time	Power (W)	A	B	C	D	E	F	G	□H	I	J	ΦK	ISO 5211	Weight (Kg)
EMTMX-3305	130	23RPM	375	234	150	271	571	275	174	355	□19X19	4-M10	55	102	F10	60
												4-M12		125	F12	
EMTMX-3310	250	23RPM	750	234	150	287	586	275	174	355	□19X19	4-M10		102	F10	60
												4-M12		125	F12	
EMTMX-3320	450	23RPM	1500	234	150	338	637	275	174	355	□22X22	4-M10		102	F10	65
												4-M12		125	F12	
EMTMX-3330	720	23RPM	2250	234	150	368	667	275	174	355	□27X27	4-M12		125	F12	65

Remark: Upper"□H"dimension is suggestive square-hole, can be decied by customer under which meets ISO5211 standard.

Actuator outline Dimension, pls refer to Table 1&2

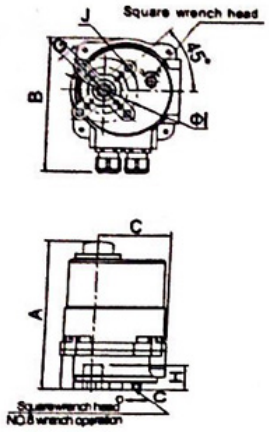

EFM1/A

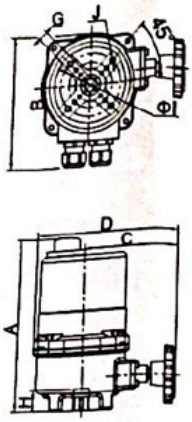

EFM1/A/B-H

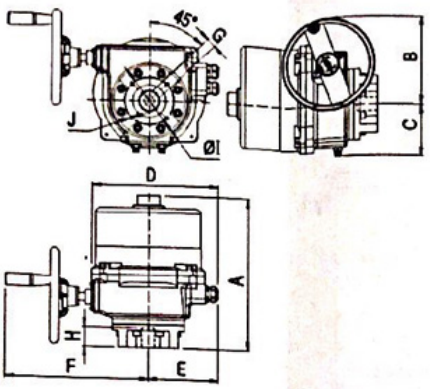

EOM2~7
EFM2 ~9

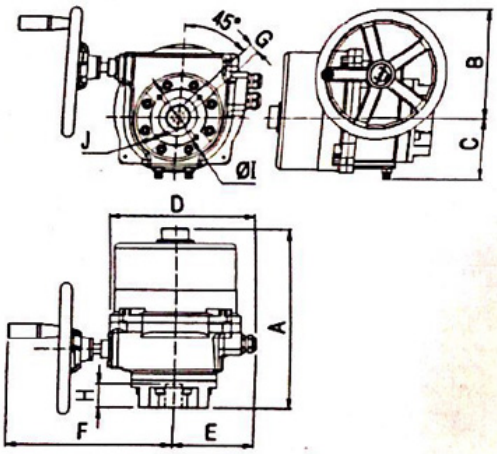

EOM8~9

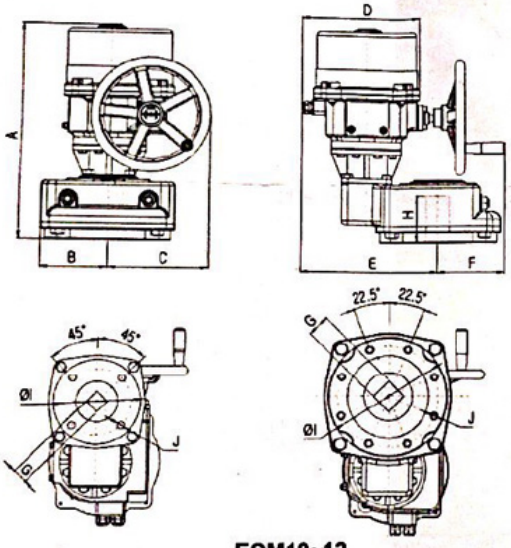

EOM10~12

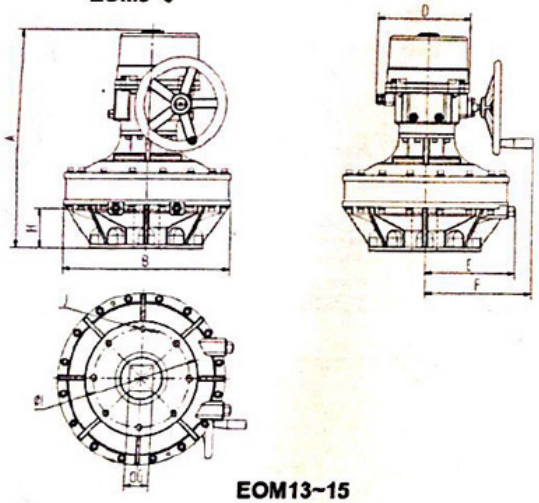

EOM13~15

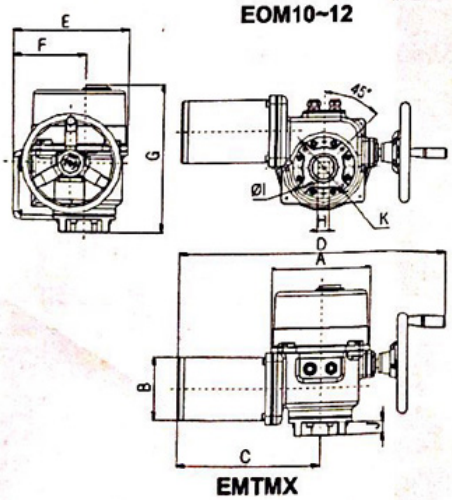

EMTMX

*Remark:

- EFM1/A is without hand wheel type, Please use 8# wrench to operate as arrow direction on the bottom of actuator.
- Other types can offer hand wheel function, either On/off or modulating type.

Customer wiring diagram (Dotted Line)

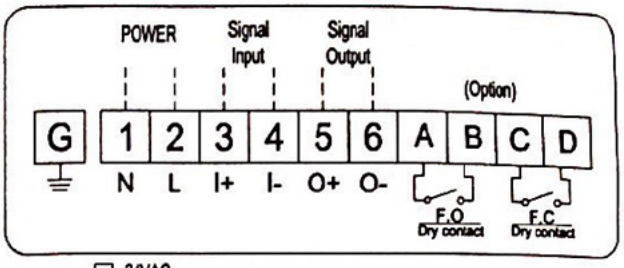

☐ 24VAC
☐ 110VAC
☐ 120VAC
☐ 220VAC
☐ 230VAC
☐ 240VAC

Modulating type wiring

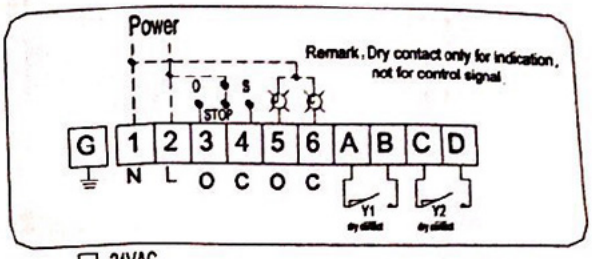

☐ 24VAC
☐ 110VAC
☐ 120VAC
☑ 220VAC
☐ 230VAC
☐ 240VAC

On/off type wiring

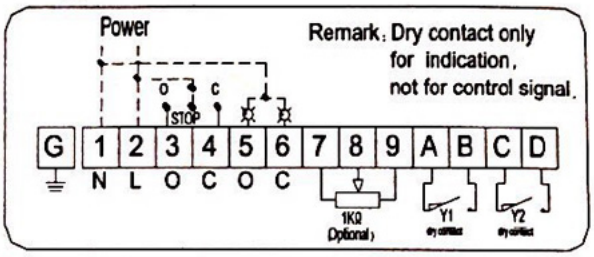

☐ 24VAC
☐ 110VAC
☐ 120VAC
☐ 220VAC
☐ 230VAC
☐ 240VAC

On/off type with potentiometers feedback wiring

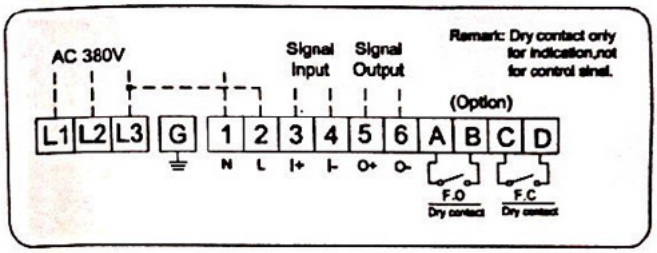

☐ AC380V
☐ AC440V

Full set modulating type wiring

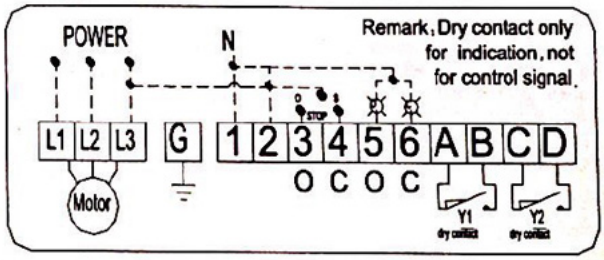

☐ AC380V
☐ AC440V

Full set On/off type wiring

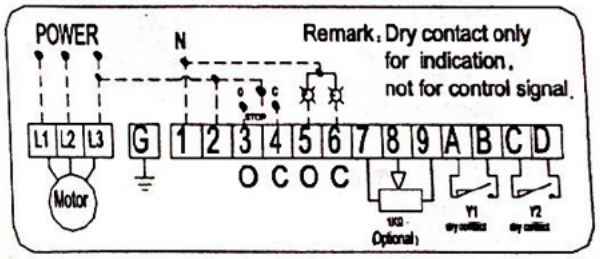

☐ AC380V
☐ AC440V

Full set On/off type with potentiometers feedback wiring

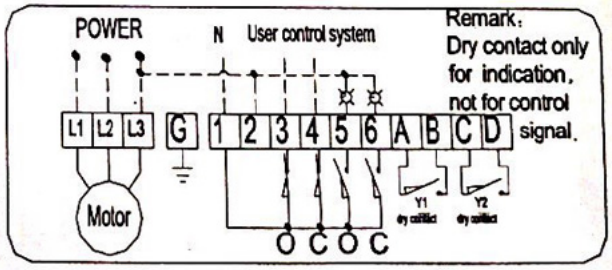

☐ AC380V
☐ AC440V

Standard On/off type wiring

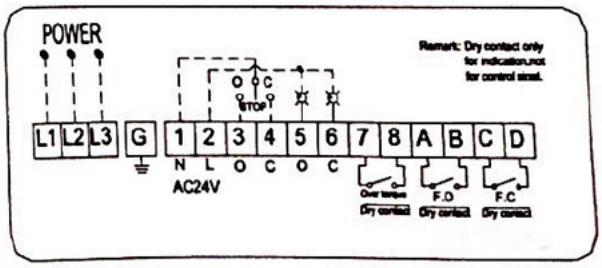

☐ AC380V
☐ AC440V

Full set On/off type (SCOTT WIRING)

☐ **For actuators with special requirements, please refer to wiring diagram within them.**

Sản phẩm khác



Electric Actuator FLOWINN - EOM 10~11~12

Xem thêm Electric Actuator FLOWINN - EOM 10~11~12



Electric Actuator FLOWINN - EOM10

Xem thêm Electric Actuator FLOWINN - EOM10

Electric Actuator FLOWINN - EFMA - H

Xem thêm Electric Actuator FLOWINN - EFMA - H

Electric Actuator FLOWINN - EFMA

Xem thêm Electric Actuator FLOWINN - EFMA



Động cơ điện đóng mở van Flowinn - ON - OFF - EFMB - 3 - K5

Xem thêm Động cơ điện đóng mở van Flowinn - ON - OFF - EFMB - 3 - K5



Động cơ điện đóng mở van Flowinn - ON - OFF - EFMB - H

Xem thêm Động cơ điện đóng mở van Flowinn - ON - OFF - EFMB - H