TÊ HÀN THÉP

MẢ SẢN PHẨM	SP - 32
TÊN SẢN PHẨM	TÊ HÀN THÉP ĐÚC ASTM A234 WPB ANSI B16.9
Kiểu Nối	Hàn đối đầu - Butt-welding - (B/W)
Chất Liệu	Thép đúc - Carbon Steel ASTM A234 GR WBP

Tiêu Chuẩn	ASME/ANSI B 16.9 ~ B 16.25 ~ B 16.28
Độ Dày	STD ~ SCH 40s ~ SCH 80s ~ SCH 120s ~ SCH160s ~ XXs
Kích Cỡ	DN 15A → DN 1200A ⇔ (21.3 mm → 1219.2 mm)
Sử Dụng	Nước, gas, xăng, dầu, thủy lực, hơi nóng, khí nén,...
Tình Trạng	Hàng có sẵn, mới 100%
Xuất Xứ	Trung Quốc - Đài Loan
Đơn Giá	Xin liên hệ

Equal and reducing tees

APCO

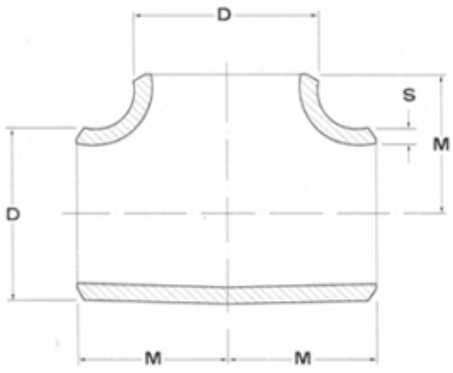

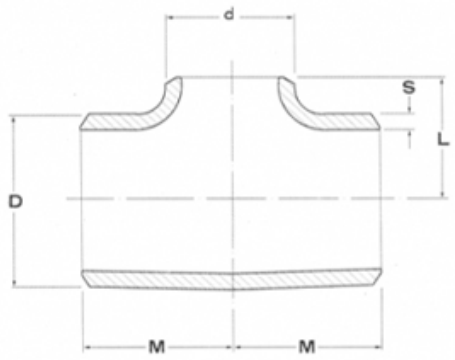

D	d	M	L	Ødia.	SCH.STD		SCH.XS		SCH.10		SCH.20		SCH.30		SCH.40	
					S	S1	S	S1	S	S1	S	S1	S	S1	S	S1
21.3	-	25.4	25.4	1/2"	2.77	-	3.73	-	-	-	-	-	-	-	2.77	-
26.7	-	28.5	28.5	3/4"	2.87	-	3.91	-	-	-	-	-	-	-	2.87	-
26.7	21.3			3/4"x 1/2"	2.87	2.77	3.91	3.73	-	-	-	-	-	-	2.87	2.77
33.4	-	38.1	38.1	1"	3.38	-	4.55	-	-	-	-	-	-	-	3.38	-
33.4	26.7			1"x 3/4"	3.38	2.87	4.55	3.91	-	-	-	-	-	-	3.38	2.87
33.4	21.3			1"x 1/2"	3.38	2.77	4.55	3.73	-	-	-	-	-	-	3.38	2.77
42.2	-	47.6	47.6	1-1/4"	3.56	-	4.85	-	-	-	-	-	-	-	3.56	-
42.2	33.4			1-1/4"x 1"	3.56	3.38	4.85	4.55	-	-	-	-	-	-	3.56	3.38
42.2	26.7			1-1/4"x 3/4"	3.56	2.87	4.85	3.91	-	-	-	-	-	-	3.56	2.87
42.2	21.3			1-1/4"x 1/2"	3.56	2.77	4.85	3.73	-	-	-	-	-	-	3.56	2.77
48.3	-	57.1	57.1	1-1/2"	3.68	-	5.08	-	-	-	-	-	-	-	3.68	-
48.3	42.2			1-1/2"x 1-1/4"	3.68	3.56	5.08	4.85	-	-	-	-	-	-	3.68	3.56
48.3	33.4			1-1/2"x 1"	3.68	3.38	5.08	4.55	-	-	-	-	-	-	3.68	3.38
48.3	26.7			1-1/2"x 3/4"	3.68	2.87	5.08	3.91	-	-	-	-	-	-	3.68	2.87
48.3	21.3			1-1/2"x 1/2"	3.68	2.77	5.08	3.73	-	-	-	-	-	-	3.68	2.77
60.3	-	63.5	63.5	2"	3.91	-	5.54	-	-	-	-	-	-	-	3.91	-
60.3	48.3		60.3	2"x 1-1/2"	3.91	3.68	5.54	5.08	-	-	-	-	-	-	3.91	3.68
60.3	42.4		54.2	2"x 1-1/4"	3.91	3.56	5.54	4.85	-	-	-	-	-	-	3.91	3.56
60.3	33.4		50.8	2"x 1"	3.91	3.38	5.54	4.55	-	-	-	-	-	-	3.91	3.38
60.3	26.7		44.5	2"x 3/4"	3.91	2.87	5.54	3.91	-	-	-	-	-	-	3.91	2.87
60.3	21.3		44.5	2"x 1/2"	3.91	2.77	5.54	3.73	-	-	-	-	-	-	3.91	2.77
73.0	-	76.2	76.2	2-1/2"	5.16	-	7.01	-	-	-	-	-	-	-	5.16	-
73.0	60.3		69.9	2-1/2"x 2 "	5.16	3.91	7.01	5.54	-	-	-	-	-	-	5.16	3.91
73.0	48.3		66.7	2-1/2"x 1-1/2"	5.16	3.68	7.01	5.08	-	-	-	-	-	-	5.16	3.68
73.0	42.2		63.5	2-1/2"x 1-1/4"	5.16	3.56	7.01	4.85	-	-	-	-	-	-	5.16	3.56
73.0	33.4		54.2	2-1/2"x 1"	5.16	3.38	7.01	4.55	-	-	-	-	-	-	5.16	3.38
88.9	-	85.7	85.4	3"	5.49	-	7.62	-	-	-	-	-	-	-	5.49	-
88.9	73.0		82.6	3"x 2-1/2"	5.49	5.16	7.62	7.01	-	-	-	-	-	-	5.49	5.16
88.9	60.3		76.2	3"x 2"	5.49	3.91	7.62	5.54	-	-	-	-	-	-	5.49	3.91
88.9	48.3		79.0	3"x 1-1/2"	5.49	3.68	7.62	5.08	-	-	-	-	-	-	5.49	3.68
88.9	42.2		69.9	3"x 1-1/4"	5.49	3.56	7.62	4.85	-	-	-	-	-	-	5.49	3.56
88.9	33.4		65.9	3"x 1"	5.49	3.38	7.62	4.55	-	-	-	-	-	-	5.49	3.38
101.6	-	95.2	95.2	3-1/2"	5.74	-	8.08	-	-	-	-	-	-	-	5.74	-
101.6	88.9		92.5	3-1/2"x 3"	5.74	5.49	8.08	7.62	-	-	-	-	-	-	5.74	5.49
101.6	73.0		88.9	3-1/2"x 2-1/2"	5.74	5.16	8.08	7.01	-	-	-	-	-	-	5.74	5.16

Equal and reducing tees

APCO

SCH.60		SCH.80		SCH.100		SCH.120		SCH.140		SCH.160		SCH.XXS		Ødia.
S	S1	S	S1	S	S1	S	S1	S	S1	S	S1	S	S1	
-	-	3.73	-	-	-	-	-	-	-	4.75	-	7.47	-	1/2"
-	-	3.91	-	-	-	-	-	-	-	5.54	-	7.82	-	3/4"
-	-	3.91	3.73	-	-	-	-	-	-	5.54	4.75	7.82	7.47	3/4"x 1/2"
-	-	4.55	-	-	-	-	-	-	-	6.35	-	9.09	-	1"
-	-	4.55	3.91	-	-	-	-	-	-	6.35	5.54	9.09	7.82	1"x 3/4"
-	-	4.55	3.73	-	-	-	-	-	-	6.35	4.75	9.09	7.47	1"x 1/2"
-	-	4.85	-	-	-	-	-	-	-	6.35	-	9.70	-	1-1/4"
-	-	4.85	4.55	-	-	-	-	-	-	6.35	6.35	9.70	9.09	1-1/4"x 1"
-	-	4.85	3.91	-	-	-	-	-	-	6.35	5.54	9.70	7.82	1-1/4"x 3/4"
-	-	4.85	3.73	-	-	-	-	-	-	6.35	4.75	9.70	7.47	1-1/4"x 1/2"
-	-	5.08	-	-	-	-	-	-	-	7.14	-	10.16	-	1-1/2"
-	-	5.08	4.85	-	-	-	-	-	-	7.14	6.35	10.16	9.70	1-1/2"x 1-1/4"
-	-	5.08	4.55	-	-	-	-	-	-	7.14	6.35	10.16	9.09	1-1/2"x 1"
-	-	5.08	3.91	-	-	-	-	-	-	7.14	5.54	10.16	7.82	1-1/2"x 3/4"
-	-	5.08	3.73	-	-	-	-	-	-	7.14	4.75	10.16	7.47	1-1/2"x 1/2"
-	-	5.54	-	-	-	-	-	-	-	8.71	-	11.07	-	2"
-	-	5.54	5.08	-	-	-	-	-	-	8.71	7.14	11.07	10.06	2"x 1-1/2"
-	-	5.54	4.85	-	-	-	-	-	-	8.71	6.35	11.07	9.70	2"x 1-1/4"
-	-	5.54	4.55	-	-	-	-	-	-	8.71	6.35	11.07	9.09	2"x 1"
-	-	5.54	3.91	-	-	-	-	-	-	8.71	5.54	11.07	7.82	2"x 3/4"
-	-	5.54	3.73	-	-	-	-	-	-	8.71	4.75	11.07	7.47	2"x 1/2"
-	-	7.01	-	-	-	-	-	-	-	9.52	-	14.02	-	2-1/2"
-	-	7.01	5.54	-	-	-	-	-	-	9.52	8.71	14.02	11.07	2-1/2"x 2 "
-	-	7.01	5.08	-	-	-	-	-	-	9.52	7.14	14.02	10.06	2-1/2"x 1-1/2"
-	-	7.01	4.85	-	-	-	-	-	-	9.52	6.35	14.02	9.70	2-1/2"x 1-1/4"
-	-	7.01	4.55	-	-	-	-	-	-	9.52	6.35	14.02	9.09	2-1/2"x 1"
-	-	7.62	-	-	-	-	-	-	-	11.12	-	15.24	-	3"
-	-	7.62	7.01	-	-	-	-	-	-	11.12	9.52	15.24	14.02	3"x 2-1/2"
-	-	7.62	5.54	-	-	-	-	-	-	11.12	8.71	15.24	11.07	3"x 2"
-	-	7.62	5.08	-	-	-	-	-	-	11.12	7.14	15.24	10.16	3"x 1-1/2"
-	-	7.62	4.85	-	-	-	-	-	-	11.12	6.35	15.24	9.70	3"x 1-1/4"
-	-	7.62	4.55	-	-	-	-	-	-	11.12	6.35	15.24	9.09	3"x 1"
-	-	8.08	-	-	-	-	-	-	-	-	-	-	-	3-1/2"
-	-	8.08	7.62	-	-	-	-	-	-	-	-	-	-	3-1/2"x 3"
-	-	8.08	7.01	-	-	-	-	-	-	-	-	-	-	3-1/2"x 2-1/2"

stainless & carbon steel

Equal and Reducing Tees

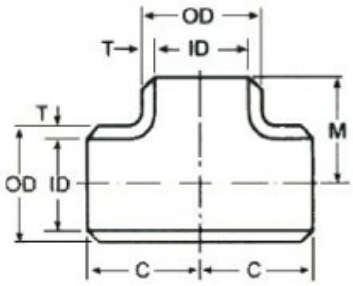

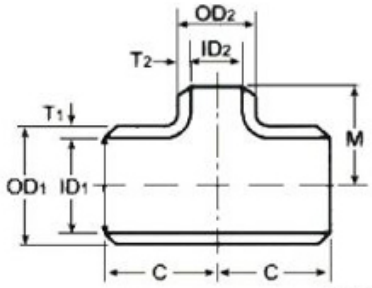

MSS SP-75 ANSI B16.9 (in mm)
* Wellgrow's standard.

Nominal Pipe Size (NPS)	Outside Diameter At Bevel D		Center to End	
	Run	Outlet	Run C	Outlet (1) M
14 x 14	355.6	355.6	279.4	279.4
14 x 12		323.9		269.7
14 x 10		273.1		257.0
14 x 8		219.1		247.6
14 x 6		168.3		238.3
16 x 16	406.4	406.4	304.8	304.8
16 x 14		355.6		304.8
16 x 12		323.9		295.1
16 x 10		273.1		282.4
16 x 8		219.1		373.0
16 x 6		168.3		263.7
18 x 18	457.2	457.2	342.9	342.9
18 x 16		406.4		330.2
18 x 14		355.6		330.2
18 x 12		323.9		320.5
18 x 10		273.1		307.8
18 x 8		219.1		298.4
20 x 20	508.0	508.0	381.0	381.0
20 x 18		457.2		369.3
20 x 16		406.4		355.6
20 x 14		355.6		355.6
20 x 12		323.9		345.9
20 x 10		273.1		333.2
20 x 8		219.1		323.8
22 x 22	558.8	558.8	419.1	419.1
22 x 20		508.0		406.4
22 x 18		457.2		393.7
22 x 16		406.4		381.0
22 x 14		355.6		381.0
22 x 12		323.9		371.3
22 x 10		273.1		358.6
24 x 24	609.6	609.6	431.8	431.8
24 x 22		558.8		431.8
24 x 20		508.0		431.8
24 x 18		457.2		419.1
24 x 16		406.4		406.4
24 x 14		355.6		406.4
24 x 12		323.9		396.7
24 x 10		273.1		384.0
26 x 26	660.4	660.4	495.3	495.3
26 x 24		609.6		482.6

Nominal Pipe Size (NPS)	Outside Diameter At Bevel D		Center to End	
	Run	Outlet	Run C	Outlet (1) M
26 x 22		558.8		469.9
26 x 20		508.0		457.2
26 x 18		457.2		444.5
26 x 16		406.4		431.8
26 x 14		355.6		431.8
26 x 12		323.1		422.1
28 x 28	711.2	711.2	520.7	520.7
28 x 26		660.4		520.7
28 x 24		609.6		508.0
28 x 22		558.8		495.3
28 x 20		508.0		482.6
28 x 18		457.2		469.9
28 x 16		406.4		457.2
28 x 14		355.6		457.2
28 x 12		323.1		447.5
30 x 30	762.0	762.0	558.8	558.8
30 x 28		711.2		546.1
30 x 26		660.4		546.1
30 x 24		609.6		533.4
30 x 22		558.8		520.7
30 x 20		508.0		508.0
30 x 18		457.2		495.3
30 x 16		406.4		482.6
30 x 14		355.6		482.6
30 x 12		323.9		472.6
30 x 10		273.1		460.2
32 x 32	812.8	812.8	596.9	596.9
32 x 30		762.0		584.2
32 x 28		711.2		571.5
32 x 26		660.4		571.5
32 x 24		609.6		558.8
32 x 22		558.8		546.1
32 x 20		508.0		533.4
32 x 18		457.2		520.7
32 x 16		406.4		508.0
32 x 14		355.6		508.0
34 x 34	863.6	863.6	635.0	635.0
34 x 32		812.8		622.3
34 x 30		762.0		609.6
34 x 28		711.2		596.9
34 x 26		660.4		596.9

(1) Outlet dimension "M" for run sizes 14 and larger is recommended but not mandatory.

Equal and reducing tees

APCO

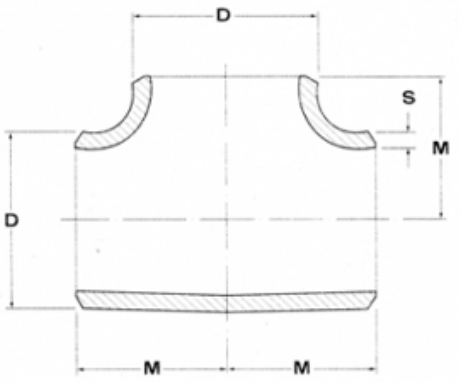

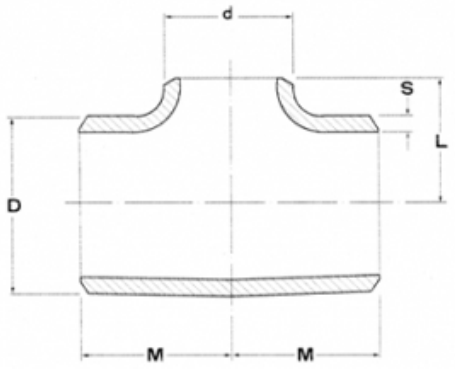

D	d	M	L	Ødia.	SCH.STD		SCH.XS		SCH.10		SCH.20		SCH.30		SCH.40	
					S	S1	S	S1	S	S1	S	S1	S	S1	S	S1
101.6	60.3		82.6	3-1/2"x 2"	5.74	3.91	8.08	5.54	-	-	-	-	-	-	5.74	3.91
101.6	48.3	95.2	79.4	3-1/2"x 1-1/2"	5.74	3.68	8.08	5.08	-	-	-	-	-	-	5.74	3.68
101.6	42.2		77.4	3-1/2"x 1-1/4"	5.74	3.56	8.08	4.85	-	-	-	-	-	-	5.74	3.56
114.3	-		104.8	4"	6.02	-	8.56	-	-	-	-	-	-	-	6.02	-
114.3	101.6		101.6	4"x 3-1/2"	6.02	5.74	8.56	8.08	-	-	-	-	-	-	6.02	5.74
114.3	88.9		98.4	4"x 3"	6.02	5.49	8.56	7.62	-	-	-	-	-	-	6.02	5.49
114.3	73.0		95.2	4"x 2-1/2"	6.02	5.16	8.56	7.01	-	-	-	-	-	-	6.02	5.16
114.3	60.3	104.8	88.9	4"x 2"	6.02	3.91	8.56	5.54	-	-	-	-	-	-	6.02	3.91
114.3	48.3		85.7	4"x 1-1/2"	6.02	3.68	8.56	5.08	-	-	-	-	-	-	6.02	3.68
114.3	42.2		83.7	4"x 1-1/4"	6.02	3.56	8.56	4.85	-	-	-	-	-	-	6.02	3.56
114.3	33.4		78.6	4"x 1"	6.02	3.38	8.56	4.55	-	-	-	-	-	-	6.02	3.38
141.3	-		123.8	5"	6.55	-	9.52	-	-	-	-	-	-	-	6.55	-
141.3	114.3		117.4	5"x 4"	6.55	6.02	9.52	8.56	-	-	-	-	-	-	6.55	6.02
141.3	101.6	123.8	114.3	5"x 3-1/2"	6.55	5.74	9.52	8.08	-	-	-	-	-	-	6.55	5.74
141.3	88.9		111.1	5"x 3"	6.55	5.49	9.52	7.62	-	-	-	-	-	-	6.55	5.49
141.3	73.0		107.9	5"x 2-1/2"	6.55	5.16	9.52	7.01	-	-	-	-	-	-	6.55	5.16
141.3	60.3		104.7	5"x 2"	6.55	3.91	9.52	5.54	-	-	-	-	-	-	6.55	3.91
168.3	-		142.8	6"	7.11	-	10.97	-	-	-	-	-	-	-	7.11	-
168.3	141.3		136.5	6"x 5"	7.11	6.55	10.97	9.52	-	-	-	-	-	-	7.11	6.55
168.3	114.3		130.1	6"x 4"	7.11	6.02	10.97	8.56	-	-	-	-	-	-	7.11	6.02
168.3	101.6	142.8	127.0	6"x 3-1/2"	7.11	5.74	10.97	8.08	-	-	-	-	-	-	7.11	5.74
168.3	88.9		123.8	6"x 3"	7.11	5.49	10.97	7.62	-	-	-	-	-	-	7.11	5.49
168.3	73.0		120.6	6"x 2-1/2"	7.11	5.16	10.97	7.01	-	-	-	-	-	-	7.11	5.16
168.3	60.3		115.9	6"x 2"	7.11	3.91	10.97	5.54	-	-	-	-	-	-	7.11	3.91
219.1	-		177.8	8"	8.18	-	12.70	-	-	-	6.35	-	7.04	-	8.18	-
219.1	168.3		168.2	8"x 6"	8.18	7.11	12.70	10.97	-	-	-	-	-	-	8.18	7.11
219.1	141.3		161.9	8"x 5"	8.18	6.55	12.70	9.52	-	-	-	-	-	-	8.18	6.55
219.1	114.3	177.8	155.5	8"x 4"	8.18	6.02	12.70	8.56	-	-	-	-	-	-	8.18	6.02
219.1	101.6		152.4	8"x 3-1/2"	8.18	5.74	12.70	8.08	-	-	-	-	-	-	8.18	5.74
219.1	88.9		150.8	8"x 3"	8.18	5.49	12.70	7.62	-	-	-	-	-	-	8.18	5.49
273.0	-		215.9	10"	9.27	-	12.70	-	-	-	6.35	-	7.80	-	9.27	-
273.0	219.1		203.2	10"x 8"	9.27	8.18	12.70	12.70	-	-	6.35	6.35	7.80	7.04	9.27	8.18
273.0	168.3	215.9	193.7	10"x 6"	9.27	7.11	12.70	10.97	-	-	-	-	-	-	9.27	7.11
273.0	141.3		190.5	10"x 5"	9.27	6.55	12.70	9.52	-	-	-	-	-	-	9.27	6.55
273.0	114.3		184.2	10"x 4"	9.27	6.02	12.70	8.56	-	-	-	-	-	-	9.27	6.02

weights of the fittings

APCO

Type	DIAM.	1/2"	3/4"	1"	1-1/4"	1-1/2"	2"	2-1/2"	3"	3-1/2"	4"	5"	6"	8"
	SCH \ mm	21.3	26.7	33.4	42.2	48.3	60.3	73.0	88.9	101.6	114.3	141.3	168.3	219.1
	STD		0.09	0.10	0.20	0.30	0.40	0.80	1.00	1.40	1.60	2.80	4.00	6.50
	XS		0.16	0.20	0.30	0.40	0.60	1.00	1.40	2.00	2.20	4.00	6.00	9.90
	10	-	-	-	-	-	-	-	-	-	-	-	-	-
	20	-	-	-	-	-	-	-	-	-	-	-	-	5.80
	30	-	-	-	-	-	-	-	-	-	-	-	-	6.20
	40		0.09	0.10	0.20	0.30	0.40	0.80	1.00	1.40	1.60	2.80	4.00	6.50
	60	-	-	-	-	-	-	-	-	-	-	-	-	8.60
	80		0.16	0.20	0.30	0.40	0.60	1.00	1.40	2.00	2.20	4.00	6.00	9.90
	100	-	-	-	-	-	-	-	-	-	-	-	-	12.60
	120	-	-	-	-	-	-	-	-	-	3.00	5.60	8.30	15
	140	-	-	-	-	-	-	-	-	-	-	-	-	17
	160			0.25	0.30	0.50	1.10	1.60	2.00	2.80	4.00	7.00	10.50	18
	XXS			0.35	0.45	0.70	1.30	2.10	2.60	3.70	4.70	8.00	12.30	18
	STD	0.10	0.16	0.36	0.50	0.70	1.00	1.80	2.70	3.55	4.40	7.00	10	19
	XS	0.16	0.22	0.47	0.70	0.90	1.40	2.20	3.00	4.89	6.40	9.30	15	28.90
	10	-	-	-	-	-	-	-	-	-	-	-	-	-
	20	-	-	-	-	-	-	-	-	-	-	-	-	
	30	-	-	-	-	-	-	-	-	-	-	-	-	
	40	0.10	0.16	0.36	0.50	0.70	1.00	1.80	2.70	3.55	4.40	7.00	10	19
	60	-	-	-	-	-	-	-	-	-	-	-	-	
	80	0.16	0.22	0.47	0.70	0.90	1.40	2.20	3.00	4.89	6.40	9.30	15	28.90
	100	-	-	-	-	-	-	-	-	-	-	-	-	
	120	-	-	-	-	-	-	-	-	-				
	140	-	-	-	-	-	-	-	-	-	-	-	-	
	160	0.25	0.35	0.80	1.00	1.50	2.50	4.00	6.00	8.00	10	20	25	52
	XXS	0.30	0.45	1.00	1.20	1.80	3.00	6.00	8.00	11	13	24	30	52
	STD	0.13	0.20	0.47	0.65	0.91	1.30	2.35	3.50	4.60	5.70	9.10	13	24.70
	XS	0.20	0.30	0.61	0.91	1.17	1.85	2.90	3.90	6.35	8.30	12	19.50	37.60
	10	-	-	-	-	-	-	-	-	-	-	-	-	-
	20	-	-	-	-	-	-	-	-	-	-	-	-	
	30	-	-	-	-	-	-	-	-	-	-	-	-	
	40	0.13	0.20	0.47	0.65	0.91	1.30	2.35	3.50	4.60	5.70	9.10	13	24.70
	60	-	-	-	-	-	-	-	-	-	-	-	-	
	80	0.20	0.30	0.61	0.91	1.17	1.85	2.90	3.90	6.35	8.30	12	19.50	37.60
	100	-	-	-	-	-	-	-	-	-	-	-	-	
	120	-	-	-	-	-	-	-	-	-				
	140	-	-	-	-	-	-	-	-	-	-	-	-	
	160	0.32	0.45	1.04	1.30	1.95	3.25	5.20	7.80	10.40	13	26	32.5	67.60
	XXS	0.40	0.60	1.30	1.56	2.35	3.90	7.80	10.40	14.30	16.90	31.20	39	37.60
	STD	0.03	0.06	0.10	0.20	0.25	0.30	0.40	0.60	1.10	1.20	2.10	3.60	5.50
	XS	0.05	0.10	0.15	0.25	0.30	0.35	0.50	0.90	1.70	2.00	3.00	5.00	7.00
	10	-	-	-	-	-	-	-	-	-	-	-	-	-
	20	-	-	-	-	-	-	-	-	-	-	-	-	
	30	-	-	-	-	-	-	-	-	-	-	-	-	
	40	0.03	0.06	0.10	0.20	0.25	0.30	0.40	0.60	1.10	1.20	2.10	3.60	5.50
	60	-	-	-	-	-	-	-	-	-	-	-	-	
	80	0.05	0.10	0.15	0.25	0.30	0.35	0.50	0.90	1.70	2.00	3.00	5.00	7.00
	100	-	-	-	-	-	-	-	-	-	-	-	-	
	120	-	-	-	-	-	-	-	-	-	-	-	-	
	140	-	-	-	-	-	-	-	-	-	-	-	-	
	160	0.10	0.10	0.15	0.25	0.30	0.55	0.90	1.40	2.50	3.00	5.50	7.50	18
	XXS	0.15	0.15	0.20	0.30	0.40	0.60	1.00	1.80	2.70	4.00	7.00	9.00	18

weights of the fittings

APCO

10"	12"	14"	16"	18"	20"	22"	24"	26"	28"	30"	32"	34"	36"	DIAM.
273.0	323.8	355.6	406.4	457.2	508.0	558.8	609.6	660.4	711.2	762.0	812.8	863.6	914.4	mm / SCH
10	15	30	37	45	68	72	77	100	105	110	125	130	135	STD
14	19	36	48	58	86	93	100	130	140	145	150	158	175	XS
-	-	25	33	40	62	67	70							10
9	13	28	35	42	68	72	77	130	140					20
20	14	30	37	54	86	93	115	-						30
10	16	34	48	68	105	130	143	-	-	-				40
14	23	47	62	90	140		205	-	-	-	-	-	-	60
18	29	60	82	110	173		257	-	-	-	-	-	-	80
22	35	72	98	132	210		315	-	-	-	-	-	-	100
26	41	82	114	150	240		380	-	-	-	-	-	-	120
30	46	92	131	172	275		440	-	-	-	-	-	-	140
32	56	104	145	195	310	450	480	-	-	-	-	-	-	160
34	46	-	-	-	-	-	-	-	-	-	-	-	-	XXS
30	47	60	75	105	125	165	185	250	300	345	410	460	520	STD
48	77	95	103	125	160	205	235	320	380	435	500	580	650	XS
-	-													10
														20
								-						30
30	49	85	103	170	250	300	330	-	-	-				40
								-	-	-	-	-	-	60
52	90	125	195	235	330	490	550	-	-	-	-	-	-	80
								-	-	-	-	-	-	100
								-	-	-	-	-	-	120
								-	-	-	-	-	-	140
88	145	270	360	500	700	1130	1160	-	-	-	-	-	-	160
95	130	-	-	-	-	-	-	-	-	-	-	-	-	XXS
39	61	78	97	136	163	189	215							STD
62	101	124	134	163	208	241	267							XS
-	-													10
														20
								-						30
39	66					-		-	-	-				40
								-	-	-	-	-	-	60
								-	-	-	-	-	-	80
								-	-	-	-	-	-	100
								-	-	-	-	-	-	120
								-	-	-	-	-	-	140
111	182							-	-	-	-	-	-	160
		-	-	-	-	-	-	-	-	-	-	-	-	XXS
10	14	17	23	28	35	44	51	56	60	65	71	80	85	STD
12	18	23	30	32	46	54	60	70	75	85	95	100	110	XS
-	-													10
														20
								-						30
10	14	23	30	43	60	85	98	-	-	-				40
								-	-	-	-	-	-	60
17	31	42	55	75	100	130	155	-	-	-	-	-	-	80
								-	-	-	-	-	-	100
								-	-	-	-	-	-	120
								-	-	-	-	-	-	140
34	55	77	100	110	175	240	285	-	-	-	-	-	-	160
30	42	-	-	-	-	-	-	-	-	-	-	-	-	XXS

Sản phẩm khác

RẮC CO REN THÉP RÈN A105

Xem thêm RẮC CO REN THÉP RÈN A105

CÀ RÁ REN ÁP LỰC INOX 304L

Xem thêm CÀ RÁ REN ÁP LỰC INOX 304L

MẶT BÍCH RỖNG INOX 304

Xem thêm MẶT BÍCH RỖNG INOX 304

MẶT BÍCH INOX 304

Xem thêm MẶT BÍCH INOX 304

MẶT BÍCH MÙ THÉP SS400 DIN 2527 PN40

Xem thêm MẶT BÍCH MÙ THÉP SS400 DIN 2527 PN40

MẶT BÍCH CỔ INOX 304 ANSI CLASS 150 LBS

Xem thêm MẶT BÍCH CỔ INOX 304 ANSI CLASS 150 LBS