

VAN BƯỚM XOAY KITZ G-10XJMEA

NHÃN HIỆU	KITZ
MODEL	FIG. G-10XJMEA
Kết Nối	Mặt bích JIS10K FF / ANSI CLASS 150 RF
Thân Van	Nhôm đúc / ASTM B85-84-383.0
Ty Van	Thép không gỉ SUS410
Đĩa Van	Thép không gỉ SUS316
Đệm Kín	Cao su EPDM
Nhiệt Độ	Max 120ºC
Sử Dụng	Nước, khí nén
Kích Cỡ	DN40 → DN200 (1.1/2 Inch → 8 Inch)
Tình Trạng	Hàng có sẵn, mới 100%
Đơn Giá	Liên hệ

XJ series Aluminum Butterfly Valves

KITZ XJ series aluminum butterfly valves: Featuring a unique style for the neck designs (U.S.P. No. 6676109) to accommodate various piping designs, piping positions, and installation environments.

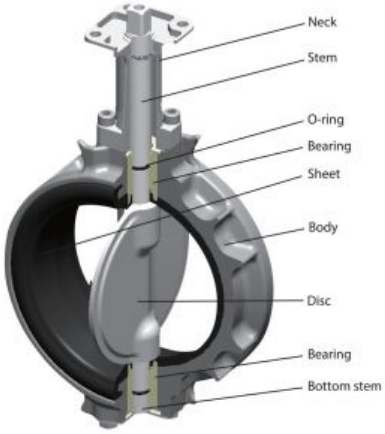

Specification

Class	JIS 10K	Class 150	PN16
Maximum service pressure	1 MPa	1 MPa	1.6 MPa (16 bar)
Service temperature range *1	−20℃ to +120℃		
Continuous service temperature range *2	−20℃ to +100℃		
Face-to-face dimension	API609, BS5155 (Short pattern) ISO 5752-20, JIS B 2002 46 series		
Coupling flanges	JIS B 2220 / 2239 10K	ASME Class 150 *3 JIS B 2220 / 2239 10K	EN1092 PN16 *3

*1 Condition : Fluid is not frozen.
*2 Refer to P-T rating chart.
*3 With centering sleeves.
Refer to the product range chart in page 2 and precaution in page 36 for details.

Cv value

Size A	Size B	Cv	Size A	Size B	Cv
40	1 1/2	76	125	5	1100
50	2	99	150	6	1820
65	2 1/2	205	200	8	2780
80	3	372	250	10	4350
100	4	723	300	12	6860

Standard Materials

*Please refer to the drawing of deliverables for detail.

Parts	Materials
Body	Alminum die-cast/equivalent ASTM B85-84-383.0
Neck	304 stainless steel
Stem	(Equivalent ASTM A276 type 410)
Disk	A351 Gr. CF8M
O-ring	EPDM
Rubber seat	EPDM
Bottom stem	(Equivalent ASTM A276 type 410)
Bearing	Metal backed PTFE (size 10" and 12") Polyphenylenesulfide (10XJMEA: size 1 1/2" to 8") Bronze: CAC401C (PN16XJME: size 2" to 8")

Feature

Your choice of two neck designs

A long neck type and a short neck type are available for use in a variety of applications.

Easy valve-to-flange centering

The light weight of the die-cast aluminum valve body (which is only one third of the weight of KITZ's conventional cast-iron butterfly valves) eases valve-to-flange centering work on mounting valves on pipelines.

Wide range of service applications

Austenitic stainless steel discs and EPDM* rubber seats can handle many different types of line fluid without risk of corrosion.

Stabilized operating torque

A pair of stem bearings assembled around the top and bottom stems prevents stem galling and stabilizes the valve operating torque for smooth and trouble-free disc rotation.

On-the-spot actuator assembly

The actuator mounting pads of all necks are designed in conformity with ISO 5211 requirements for direct on-site mounting of actuators that are provided with ISO 5211 valve mounting flanges.

Prevention of dew condensation (Long neck type)

A long stainless steel neck blocks transfer of fluid heat to the valve operating device, so no insulation is needed on the operating device. Dew condensation is also minimized for gear-operated valves used in cold water service.

Rust prevention

The main parts such as the stems, discs, necks, neck connectors, and endplates and small parts such as stopper plates, washers, and boltings are all made of stainless steel for high-grade rust prevention.

S-shaped spherical disc for high sealing performance (patented)

KITZ's original cross-sectionally S-shaped valve discs with spherical surfaces make evenly tight contact with rubber liners for excellent sealing performance with reduced operating torque. Complete 360° shut-off mechanisms help to extend the service life of rubber liners. (Size: ≥2 inches)

Carefully designed KITZ EPDM seats have the following unique features that ensure their functional stability, high sealing performance, and long life:

- Self-reinforced ribbing
- Wide disc seating contact
- Dual stem seal bearings

①Wide disc seating contact for high sealing performance.

②Reinforced ribbing minimizes valve operating problems such as distortion, skidding, and exfoliation of rubber liners caused by line pressure load and friction with metal discs.

③Stem seal bearings are assembled on the top and bottom stems for stable sealing.

④Gasketless flange sealing contact for easy valve mounting.



XJ series Aluminum Butterfly Valves

Long Neck Type

Prevented dew condensation



Feature

- A long stainless steel neck reduces the conductivity of fluid heat and prevents dew condensation.
- Variety of valve body and neck insulation designs available.
- Choice of actuators for automated valve operation.

Application

- Building utilities
- Piping networks for cold water, hot water, and other water supply

Valve Insulation

Insulation is recommended for areas in blue.

Long neck type
(G-10XJME)

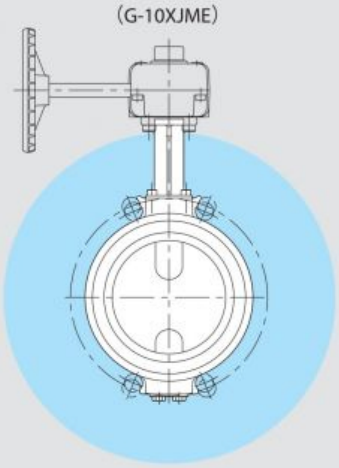

Note: It is not avairable in short neck type.

Short Neck Type

Compact design



Feature

- Suitable for piping in a limited space.
- Choice of actuators for automated valve operation.

Application

- Building utilities
- Plant facilities
- Water treatment facilities
- Industrial machinery operation

Dew Condensation Test

Samples of KITZ XJ series butterfly valves equipped with long necks (KITZ Product Code: G-10XJMEA) were tested at the KITZ Laboratory under the conditions listed below. The lower surface temperatures of gear boxes, ambient temperatures, and ambient humidities were measured as the variable functions. The dew condensation boundary was estimated as illustrated below.

G-10XJME Estimated Dew Condensation Boundary

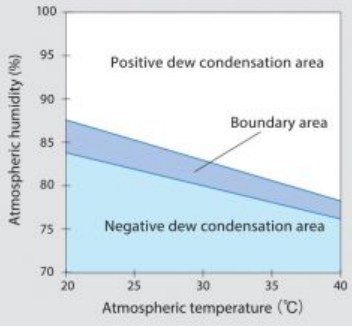

Test condition

- Line fluid: +5℃ cold water
- Atmospheric temperature range: +20℃ to +40℃
- Valve insulation: 50-mm glass wool (JIS A 9501) around the test valve, with gear boxes exposed to open air.

Note:
The estimation shown here is the result of a summary of tests carried out within a test basin at a constant temperature and humidity and does not necessarily represent the absolute values. Note that the dew condensation prevention properties of these valves may be affected by changes in the test conditions, such as the variation in the degree of air transfer, line fluid temperature, atmospheric humidity, or condition of insulation. Acceptance of an allowance of ±5% beyond the boundary area is recommended.

Long Neck Type — Lever Operated

10XJME
10XJMEA
PN16XJME



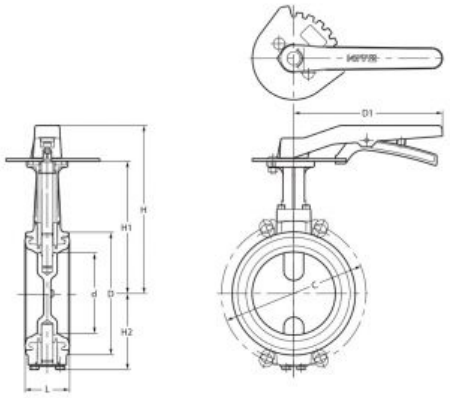

Dimensions

unit: mm

Size		d	H	H1	H2	L	D	C			D1
mm	inch							10K	Class 150	PN16	
40	1½	40	172	128	40	33	80	105	98.5	—	180
50	2	50	176	132	66	43	93	120	120.5	125	180
65	2½	65	185	141	74	46	118	140	139.5	145	180
80	3	80	193	149	83	46	129	150	152.5	160	180
100	4	100	204	160	94	52	149	175	190.5	180	180
125	5	125	249	195	122	56	184	210	216	210	230
150	6	150	261	207	135	56	214	240	241.5	240	230
200	8	196	281	234	161	60	258	—	298.5	—	350

Long Neck Type — Gear Operated

G-10XJME
G-10XJMEA
G-PN16XJME



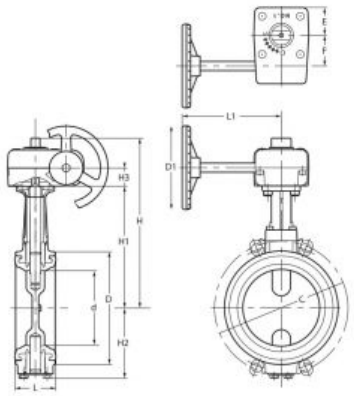

Dimensions

unit: mm

Size		d	H	H1	H2	H3	L	D	C			D1	L1	E	F	Gear type
mm	inch								10K	Class150	PN16					
40	1½	40	175	128	40	19	33	80	105	98.5	—	80	122	29	28	No. 0
50	2	50	179	132	66	19	43	93	120	120.5	125	80	122	29	28	No. 0
65	2½	65	188	141	74	19	46	118	140	139.5	145	80	122	29	28	No. 0
80	3	80	196 *2	149	83	19	46	129	150	152.5	160	80	122	29	28	No. 0
100	4	100	223	160	94	24	52	149	175	190.5	180	110	135	36	40	No. 1
125	5	125	258	195	122	24	56	184	210	216	210	110	150	36	40	No. 1
150	6	150	270	207	135	24	56	214	240	241.5	240	110	150	36	40	No. 1
200	8	196	311	234	161 *1	32	60	258	290	298.5	295	170	180	51	63	No. 2
250	10	245	405	328	238	32	68	316	355	362	—	170	180	51	63	No. 2
300	12	295	430	353	263	32	78	367	400	—	—	170	180	51	63	No. 2

*1 G-PN16XJME H2=183
*2 G-PN16XJME H=212

Sản phẩm khác



VAN BƯỚM KITZ G-PN10ZJUE

Xem thêm VAN BƯỚM KITZ G-PN10ZJUE



VAN BƯỚM KITZ PN10ZJUE

Xem thêm VAN BƯỚM KITZ PN10ZJUE



VAN 1 CHIỀU KITZ 10SFBF

Xem thêm VAN 1 CHIỀU KITZ 10SFBF



VAN 1 CHIỀU KITZ 10SF

Xem thêm VAN 1 CHIỀU KITZ 10SF



VAN 1 CHIỀU KITZ 150SCOS

Xem thêm VAN 1 CHIỀU KITZ 150SCOS



VAN BI KITZ 150SCTDZ

Xem thêm VAN BI KITZ 150SCTDZ