

Wafer Type Butterfly Valve Jaki

Giá bán: **Liên hệ**

No. 112W
•Size: DN40-DN600
•Design Standard: ISO 5752, MSS SP-67, API609
•Face to Face: EN558-1 20 Series, ISO5752 20 Series, API609
•Flange drilling according to ISO7005-2 PN10/PN16, EN1092-2 PN10/PN16, ANSI 125/150, AS4087 PN14/PN16, JIS2211-2212
•Working Pressure: PN10, PN16, 200PSI, 250PSI, 300PSI, 10K

Description

Material Specification:

Description	Material
Body	CI/DI/WCB/CF8/CF8M
Disc	DI/CF8/CF8M/C954
Stem	SS420/SS304/SS316/17-4PH
Seat	EPDM/NBR/VITON/PTFE
Bushing	PTFE
Circlip	Stainless Steel
Splint Collar	Stainless Steel
O Ring	Buna-N or EPDM
Y Ring	Buna-N or EPDM
Pin	Stainless Steel

Size DN40 to DN600

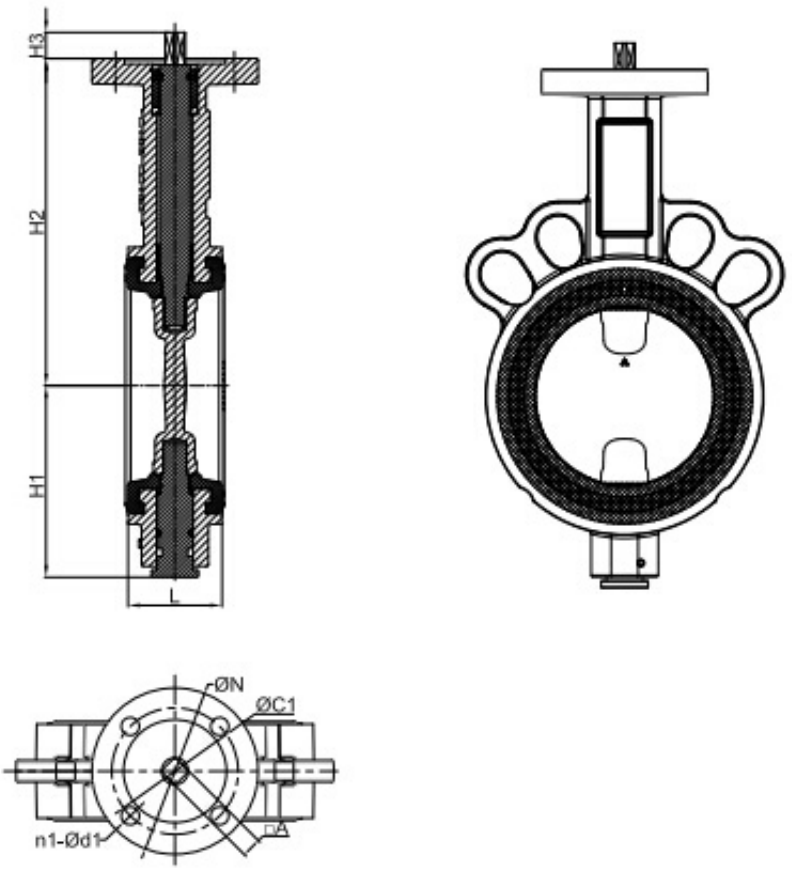

Dimensions(mm):

Size		L	H1	H2	H3	ISO 5211	ΦN	ΦC1	n1-Φ
mm	inch								
DN40	1 1/2"	33	52	126	14.5	F05	65	50	4-8
DN50	2"	43	57	143	14.5	F05	65	50	4-8
DN65	2 1/2"	46	68	155	14.5	F05	65	50	4-8
DN80	3"	46	82	160	14.5	F05	65	50	4-8
DN100	4"	52	100	181	14.5	F07	90	70	4-1
DN125	5"	56	112	194	20	F07	90	70	4-1
DN150	6"	56	126	202	20	F07	90	70	4-1
DN200	8"	60	162	240	28	F07	90	70	4-1
DN250	10"	68	193	272	28	F10	125	102	4-1
DN300	12"	78	236.5	318	28	F10	125	102	4-1
DN350	14"	78	267	368	45	F10	125	102	4-1
DN400	16"	102	298.6	400	51.2	F14	175	140	4-1
DN450	18"	114	318	422	51.2	F14	175	140	4-1
DN500	20"	127	355	480	64.2	F14	175	140	4-1

DN600	24"	154	444	562	70.2	F16	210	165	4-2

Jaki product specification in this catalogue for reference only, the product construction subject to **Jaki's** design, **Jaki** reserve the right to change the design, construction, specification without prior notice and without incuring any obligation. Any definite information kindly contact with **Jaki** directly.

Sản phẩm khác

Van bướm tay gạt JAKI 112W

Xem thêm Van bướm tay gạt JAKI 112W



Van bươm nhựa PVC - UPVC

Xem thêm Van bươm nhựa PVC - UPVC



Van bướm tay gạt Jaki

Xem thêm Van bướm tay gạt Jaki



Van bướm tay gạt Jaki

Xem thêm Van bướm tay gạt Jaki



Van bướm tay gạt inox DN100 Jaki

Xem thêm Van bướm tay gạt inox DN100 Jaki

Van bướm nhựa tay gạt

Xem thêm Van bướm nhựa tay gạt